ES9052MD HV

EMAX – digital servo with metal gears
User Manual



Read the safety instructions before first use. Never power the servo with a voltage higher than 8.4 V.

www.rotorama.com

Contents

1. Safety Instructions
2. Product Description
3. Specifications
4. Connection and Power Supply
5. Installation in the Model
6. Setup and Operation
7. Maintenance and Troubleshooting
8. Information for the EU and Czech Market
9. Warranty and rights arising from defective performance

1. Safety Instructions

1.1 Before you start

The EMAX ES9052MD HV servo is a component for building models. Read this entire manual before installation and first use, and keep it for future reference. This product is not a toy and is not intended for children without adult supervision.

- The servo may only be installed and set up by a person with basic knowledge of building and operating RC models.
- When operating a model in which the servo is installed, observe the regulations of the country in which you operate the model (e.g. rules for unmanned aircraft). **The law of the country in which the model is operated always prevails.**
- For model-making use only. Do not use it in devices whose failure could endanger people's health.

1.2 Mechanical hazards

- While power is connected, the output shaft may move at any time. Do not handle the servo arm and linkages while the servo is powered, and keep your fingers away from moving parts.
- In a model with an electric motor, always remove the propeller when setting up servos, or make sure the motor cannot start.
- Do not overload the servo. The servo must not be permanently blocked by a mechanical end stop of the control surface or linkage – this overloads and heats up both the metal gears and the electronics.

1.3 Power supply

- Power the servo only with a voltage in the range of **5.0–8.4 V**. A higher voltage will permanently damage the servo.
- Direct power from a two-cell Li-Po battery (2S, 8.4 V fully charged) is possible. A **2S LiHV** battery (8.7 V fully charged) exceeds the maximum permitted voltage – do not use it.
- Never connect the connector in reverse and never short-circuit the power wires.
- The power source (ESC BEC, separate BEC or receiver battery) must supply enough current for all connected servos at the same time – see Chapter 4.3.

1.4 Operating environment

- Operating temperature: −10 °C to 50 °C. Storage temperature: −20 °C to 60 °C.
- The servo is not waterproof. Protect it from water, moisture, dust, sand and direct radiant heat (e.g. from the motor or ESC).
- Avoid strong impacts; check the servo after every crash (Chapter 7.1).

2. Product Description

2.1 Intended use

The EMAX ES9052MD HV is a miniature digital servo with metal gears designed for high supply voltage (HV). It can be powered with 5.0–8.4 V, i.e. also directly from a two-cell Li-Po battery without a voltage regulator. Speed and torque increase with the supply voltage.

The servo is intended for driving control surfaces and flaps of smaller model aircraft and gliders, for head trackers and for other model-making applications that require a small and light servo. It is controlled by a standard PWM signal from a receiver, flight controller (FC) or other electronics.

2.2 Parts description

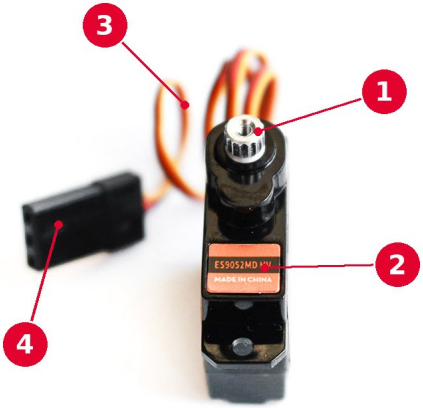

Servo parts

① Output shaft with 15T spline and M1.5 thread for the arm screw

② Label with the type designation ES9052MD HV

③ Lead (180 mm long without connector)

④ JR connector (3 pins: signal, +, −)

There are two mounting lugs with Ø 2.0 mm holes on the sides of the case (see the dimensional drawing in Chapter 3.5).

2.3 Package contents



Package contents (illustrative photo by the manufacturer)

- 1× EMAX ES9052MD HV servo with lead and JR connector
- 1× set of servo arms
- screws for mounting the servo and the arm

Not included: receiver, radio transmitter, power source (BEC, battery), linkages or extension lead.

3. Specifications

3.1 Electrical and performance data

Values according to the manufacturer's data, at no load unless stated otherwise.

Supply voltage	5.0 V	6.0 V	7.4 V	8.4 V
Speed (no load)	0.10 s/60°	0.09 s/60°	0.07 s/60°	0.06 s/60°
Stall torque (max.)	0.85 kg·cm	1.0 kg·cm	1.2 kg·cm	1.4 kg·cm
Running current at no load (max.)	90 mA	110 mA	130 mA	150 mA
Maximum current	0.35 A	0.4 A	0.5 A	0.6 A

Supply voltage range	5.0–8.4 V
Idle current (max.)	13 mA

3.2 Mechanical data

Servo type	digital
Gears	metal
Bearing	no bearing
Weight	5.8 ± 0.5 g
Output shaft	Ø 3.9 mm, 15T spline, M1.5 thread
Connector	JR
Lead length	180 ± 8 mm (without connector)

3.3 Control signal

Control system	PWM
Neutral position	1500 µs
Operating travel	90° ± 10° (at 1000–2000 µs)
Pulse width range	600–2400 µs
Maximum travel	160° ± 10° (at 600–2400 µs)
Rotating direction	counter-clockwise when the pulse changes from 1500 to 1900 µs

3.4 Operating conditions

Operating temperature	−10 °C to 50 °C
Storage temperature	−20 °C to 60 °C

3.5 Dimensions

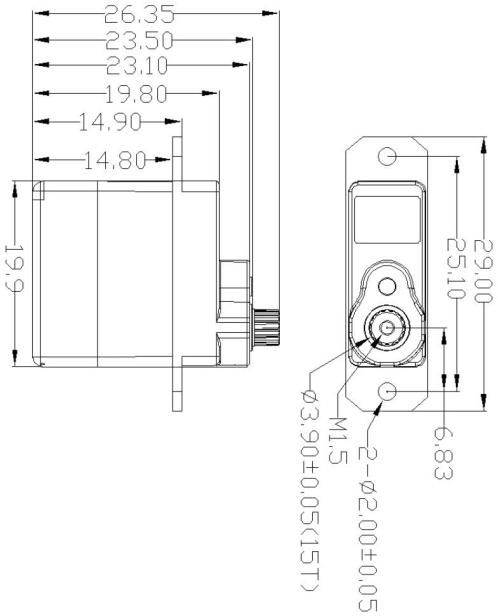

Manufacturer's dimensional drawing, dimensions in mm, tolerance ±0.2 mm unless stated otherwise

Case length	19.9 mm
Length including mounting lugs	29.0 mm
Width	8.8 mm
Height including output shaft	26.35 mm
Mounting hole spacing	25.1 mm
Mounting holes	2× Ø 2.0 mm

4. Connection and Power Supply

4.1 Connector and wires

The servo has a three-wire lead terminated with a JR connector. The wire colours follow the usual wiring of model servos:

Wire	Function	Note
orange	signal	PWM control pulse
red	+ power	5.0–8.4 V
brown	− (GND)	common ground with the receiver

- Connect the servo to a receiver or flight controller (FC) output so that the signal (orange) wire is on the signal pin (see the receiver manual). Insert the connector straight and without force; never pull on the lead.
- Route the lead so that it does not rub against sharp edges or touch moving parts. If the lead needs to be extended, use a good-quality extension lead with a sufficient wire gauge.

4.2 Supply voltage

The servo operates in the range of **5.0–8.4 V**. A higher voltage means higher speed and torque (see the table in Chapter 3.1), but also a higher current draw.

- **5–6 V BEC** (from the electronic speed controller – ESC – or a separate one) – common setup, the servo runs with lower speed and torque.
- **BEC set to 7.4–8.4 V** – full servo performance. Make sure that all other devices connected to the receiver (receiver, other servos) can also withstand this voltage.
- **2S Li-Po battery** connected directly to the receiver – fully charged it has 8.4 V (4.20 V/cell), which is the maximum permitted servo voltage. Do not use a 2S LiHV battery (8.7 V).

※ Caution: the receiver power rail supplies all servos at once. If you connect a voltage higher than 6 V to it, all connected devices must withstand it – otherwise they will be destroyed.

4.3 Sizing the power supply

The manufacturer specifies a maximum current of one servo from 0.35 A at 5.0 V to 0.6 A at 8.4 V. Choose the power source so that it covers, with a margin, the sum of the maximum currents of all servos that may move at the same time plus the receiver consumption.

- An insufficient power source shows up as a voltage drop when the servos move – the servo may jitter, the receiver may reboot and the model loses control.
- After connecting, check that the receiver does not reboot when all control surfaces are moved quickly at the same time.

5. Installation in the Model

5.1 Centring before installation

Centre the servo before fitting the arm: connect it to the receiver, switch on the radio transmitter and the receiver power and set the corresponding channel to neutral (stick centred, trim at zero). The servo moves to the neutral position corresponding to a 1500 µs pulse.

- Fit the arm onto the output shaft spline so that in the neutral position it is as close to perpendicular to the linkage as possible. Make fine adjustments in the radio transmitter (sub-trim).
- Secure the arm with the M1.5 screw into the output shaft. Do not overtighten the screw.

5.2 Mounting the servo

- Fasten the servo by both mounting lugs (Ø 2.0 mm holes, 25.1 mm spacing) using the supplied screws, or into a prepared servo bay according to the model design.
- Tighten the screws only so far that the servo holds firmly and does not tear out of the material; the case must not be deformed.
- The servo must be mounted firmly – any play in the mounting appears as play of the control surface.
- When gluing the servo into its bay, make sure no glue gets into the case or to the output shaft. For later replacement, it is advisable to wrap the servo in tape first.

5.3 Servo arm and linkage

- Connect the linkage to the arm hole according to the required throw: a hole closer to the centre = smaller throw and more force, a hole further from the centre = larger throw and less force.
- The linkage must move freely, without binding and without play. A stiff linkage puts unnecessary load on the servo and increases the current draw.
- Check that in both end positions the arm, linkage or control surface does not hit a mechanical stop before the servo reaches its end position.

6. Setup and Operation

6.1 Travel and end points

The manufacturer specifies an operating travel of 90° ± 10° at 1000–2000 µs pulses. In the extended range of 600–2400 µs, the servo reaches a travel of up to 160° ± 10°.

- Set the end points (End Points / Travel / Limits) in the radio transmitter so that the servo never pushes against a mechanical stop in any position.
- Use a range extended beyond 1000–2000 µs only if the model's mechanics really require it, and always check the end positions.
- A servo that constantly “hums” and heats up in an end position is pushing against a stop – reduce the travel.

6.2 Rotating direction

When the pulse changes from 1500 µs to 1900 µs, the output shaft rotates counter-clockwise. If the control surface moves the wrong way, reverse the channel direction in the radio transmitter (Reverse function).

6.3 Failsafe

The servo itself has no failsafe – it holds the last valid pulse for as long as it receives it. Set the behaviour on signal loss (failsafe) in the receiver or radio transmitter according to their manuals and test it on the ground by switching off the transmitter.

6.4 Check before every flight

- Check that the servo is held firmly in its bay and the arm is tightened.
- Move all control surfaces to both end positions: the movement must be smooth, in the correct direction, without binding and without clicking in the gears.
- Check that the power battery is fully charged and that the voltage on the receiver power rail does not exceed 8.4 V.
- Check the failsafe function.

7. Maintenance and Troubleshooting

7.1 Regular inspection

- Regularly and after every crash, check the output shaft for play, the arm screw and the condition of the lead and connector.
- If the servo clicks or “skips” when moving, the gears are probably damaged – stop using the servo and replace it.
- Do not disassemble or lubricate the servo and do not tamper with it. Damage caused by improper intervention is not a product defect.
- Remove dirt with a dry brush or cloth; do not use solvents.

7.2 Storage

Store the servo in a dry and clean place at a temperature of −20 °C to 60 °C. Disconnect the power battery before storing the model for a longer period.

7.3 Troubleshooting

Problem	Cause and solution
Servo does not respond	Check the connector orientation (orange wire = signal), receiver power, transmitter binding and channel assignment.
Servo jitters or oscillates	Play in the linkage or servo mounting, insufficient power supply (voltage drop), damaged lead. Check the mechanics and the power source (Chapter 4.3).
Servo hums and heats up in an end position	The servo is pushing against a mechanical stop. Reduce the end points in the transmitter or move the linkage closer to the centre of the arm.
Slight noise when holding position	Normal for digital servos when holding position under load. If it gets louder or the servo heats up, check the mechanics.
Receiver reboots when servos move	The power source is insufficient. Use a more powerful BEC or a separate receiver power supply.
Control surface moves the wrong way	Reverse the channel direction in the transmitter (Reverse).
Clicking, skipping, shaft play	Damaged gears. Stop using the servo and contact the seller.

8. Information for the EU and Czech Market

8.1 Importer and responsible person in the EU

The product is placed on the European Union market by the importer stated below, who is at the same time the responsible person within the meaning of Article 16 of Regulation (EU) 2023/988 of the European Parliament and of the Council on general product safety (GPSR).

Importer / responsible person in the EU	Rotorama, s.r.o.
Company ID (IČO)	051 57 692
VAT ID (DIČ)	CZ05157692
Registered office	Okrajová 1351, 674 01 Třebíč, Czech Republic
E-mail	info@rotorama.cz
Phone	+420 252 252 098
Website	www.rotorama.com

8.2 Product conformity

CE

- The product bears the **CE** marking and complies with the requirements of the applicable European Union harmonisation legislation.
- A copy of the **EU Declaration of Conformity** is available from the importer at the address stated above or at the e-mail address info@rotorama.cz.
- **Product identification:** the type designation (ES9052MD HV) is given on the label on the side of the servo case.

8.3 Disposal of electrical equipment



- The crossed-out wheeled bin symbol on the product, its packaging or in the documentation means that at the end of its service life the product **must not be disposed of together with mixed municipal waste**.
- Hand it over at a take-back point for electrical equipment – at a collection yard, at a take-back point of a collective system, or at the retailer when purchasing a new equivalent product. Take-back is free of charge for the end user.
- The obligations under Act No. 542/2020 Coll., on end-of-life products, are fulfilled by the importer through a collective take-back system.
- Proper disposal helps prevent negative impacts on the environment and human health and contributes to the reuse of secondary raw materials.

Through its contractual partner **ASEKOL a.s.**, the company ensures the take-back of waste electrical equipment from households and the separate collection of waste electrical equipment, batteries and accumulators in accordance with the applicable legislation. The customer is entitled to hand over old electrical equipment or a battery or accumulator at any collection point of the above contractual partner. The addresses of these take-back points are listed at www.asekol.cz, www.ecobat.cz and also https://visoh2.mzp.cz/RegistrMistZO/RegistrMistZOPublic/MapaMistZpetOdberu.

9. Warranty and rights arising from defective performance

The rights and obligations of the contracting parties are governed by Czech law, in particular by Act No. 89/2012 Coll., the Civil Code, and Act No. 634/1992 Coll., on consumer protection.

- The seller is liable to the buyer for the product being free of defects on receipt. If the buyer is a consumer, a defect may be notified **within two years of receipt** of the product (Section 2165 of the Civil Code).
- If a defect appears within **one year** of receipt, the product is deemed to have been defective already at the time of receipt (Section 2161(5) of the Civil Code).
- When purchasing online, a consumer has the right to **withdraw from the contract within 14 days** of receiving the goods without giving a reason (Section 1829 of the Civil Code).
- Claims should be made with the retailer from whom you purchased the product. The importer's contact details are given in Chapter 8.1.
- The competent body for out-of-court settlement of consumer disputes is the **Czech Trade Inspection Authority**, Štěpánská 796/44, 110 00 Prague 1, www.coi.cz.