Evoque F5/F6 V2

O4 Pro Upgrade kit
User manual

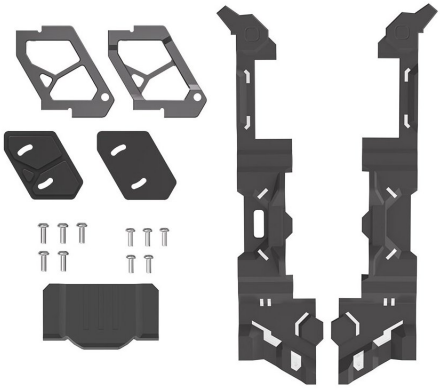

The kit is intended exclusively for the DJI O4 Air Unit Pro. Disconnect the battery and remove the propellers before installation.

www.rotorama.com

Contents

1. Product description

1.1 Intended use

1.2 Technical data and package contents

2. Use

2.1 Safety during installation

2.2 What you will need

2.3 Installation

2.4 Check after installation

3. Information for the EU and Czech Market

3.1 Importer and responsible person in the EU

3.2 Disposal

4. Warranty and rights arising from defective performance

1. Product description

1.1 Intended use

The upgrade kit is a set of mechanical parts that lets you replace the DJI O3 Air Unit on an **iFlight Nazgul Evoque F5 V2** or **F6 V2** drone or frame with the newer **DJI O4 Air Unit Pro**. The manufacturer intends the kit for owners of the Nazgul Evoque F5/F6 V2 O3 HD versions who want to upgrade to the O4 version.

The kit contains new aluminium CNC camera side plates with silicone pads that dampen camera vibrations, and new plastic frame side panels with a rear part for mounting the XT60 connector. The side panels provide good access to the DJI O4 unit. The DJI O4 Air Unit Pro itself and the connecting cables are not included.

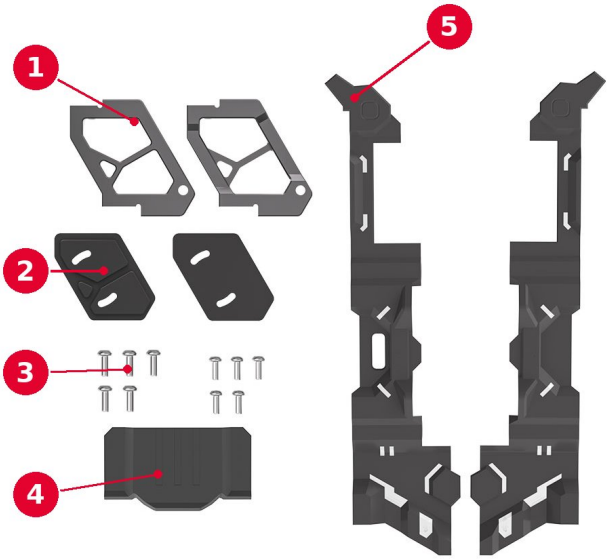

Kit contents – see the list of parts in Chapter 1.2

1.2 Technical data and package contents

Product designation	iFlight DJI O4 Pro Upgrade Kit, Nazgul Evoque F5/F6 V2 version
Manufacturer	iFlight Intelligent Technology Ltd., F6, Building B2, Galaxy IMC, Beixin Road No. 6, Zhongkai Avenue, Huizhou 516006, Guangdong, China; support@iflight.com
Compatible drones and frames	Nazgul Evoque F5 V2 and Nazgul Evoque F6 V2 (O3 HD versions)
Compatible video system	**DJI O4 Air Unit Pro** only (not the DJI O4 Air Unit)
Material	camera side plates – aluminium (CNC); frame side panels – plastic; pads – silicone

▶ Package contents

① 2× aluminium CNC camera side plate

② 2× silicone pad

③ screws: 5× M2×6 mm and 5× M2×5 mm

④ 1× rear XT60 connector mount (according to the manufacturer with a pre-installed LED)

⑤ 2× plastic frame side panel

▶ Not included

- the **DJI O4 Air Unit Pro** system (camera and video transmitter) and DJI goggles,
- connecting cables and connectors – the manufacturer states that they are the same as for the O3 BNF version and therefore does not supply them in the kit,
- ND filters and tools.

※ The camera side plates in this kit are intended exclusively for the DJI O4 Air Unit Pro. According to the manufacturer's changelog, since February 2025 the frame side panels in the kit are compatible with both the DJI O4 Air Unit Pro and the DJI O3 Air Unit.

2. Use

2.1 Safety during installation

- Before doing any work on the drone, **disconnect the battery** and **remove the propellers**.
- Handle the DJI O4 Air Unit Pro and the flight controller (FC) with care, avoid touching exposed components unnecessarily and work on a clean, dry surface.
- Tighten the screws gently – overtightening may strip the thread in aluminium as well as in plastic.
- Route the cables so that they are not pinched between the frame parts and cannot get into the propellers.
- Keep small parts and screws out of the reach of children – risk of inhalation or swallowing.

2.2 What you will need

- a Nazgul Evoque F5 V2 or F6 V2 drone or frame,
- the DJI O4 Air Unit Pro system and compatible DJI goggles,
- a connecting cable between the O4 Pro unit and the flight controller (FC),
- a screwdriver matching the screw heads in the kit and on the frame.

2.3 Installation

The manufacturer has not published a detailed installation guide for the kit. The following procedure describes the general sequence of steps; before tightening the screws, check the arrangement and orientation of the parts against their shape and the photos on the manufacturer's product page.

1) Disconnect the battery, remove the propellers and prepare a clean workplace.
2) Remove the original frame side panels and camera side plates. Disconnect and remove the original DJI O3 Air Unit. Keep the original screws separately.
3) Mount the DJI O4 Air Unit Pro camera in the new aluminium CNC side plates (part ①); use the silicone pads (part ②) to dampen camera vibrations.
4) Place the O4 Pro video transmitter in the frame and connect it to the flight controller (FC). Check the wiring against the DJI documentation and the flight controller diagram.
5) Route the antennas and cables away from the propellers so that they are not pinched once the side panels are fitted.
6) Fit the new plastic frame side panels (part ⑤) and the rear part (part ④), and fix the XT60 connector in it.
7) Screw the parts together with the screws (part ③). The manufacturer does not specify which screw goes where – before tightening, always check that the screw engages the thread and does not touch the camera or cables.

※ The manufacturer states that the rear XT60 connector mount has a pre-installed LED. Its wiring is not described on the product page; if in doubt, contact the retailer.

2.4 Check after installation

- Check that the camera is held firmly, no screw is loose and the side panels sit flush along their full length.
- Without propellers, connect the battery and check that the image is shown in the goggles. Put the DJI O4 Air Unit Pro into operation (activation, pairing with the goggles, firmware update) according to the DJI documentation.
- Make sure the cables and antennas cannot get into the propellers, and only then fit the propellers.
- During the first flight, watch for vibrations in the image (shaking, “jello”). If they appear, check the seating of the silicone pads and the tightness of the screws.
- For the Nazgul Evoque F5 V2 O4 drone, the manufacturer states that the original DJI ND filter for the O4 Pro is not compatible with it.
- When flying the drone, observe the regulations of the country in which you fly.

3. Information for the EU and Czech Market

3.1 Importer and responsible person in the EU

The product is placed on the European Union market by the importer stated below, who is at the same time the responsible person within the meaning of Article 16 of Regulation (EU) 2023/988 of the European Parliament and of the Council on general product safety (GPSR).

Importer / responsible person in the EU	Rotorama, s.r.o.
Company ID (IČO)	051 57 692
VAT ID (DIČ)	CZ05157692
Registered office	Okrajová 1351, 674 01 Třebíč, Czech Republic
E-mail	info@rotorama.cz
Phone	+420 252 252 098
Website	www.rotorama.com

3.2 Disposal



- Metal and plastic parts of the kit that contain no electronics should be disposed of in sorted waste according to local rules (metals, plastics).
- If the rear part has a pre-installed LED, it is electrical equipment and the following points apply to it.
- The crossed-out wheeled bin symbol on the product, its packaging or in the documentation means that at the end of its service life the product **must not be disposed of together with mixed municipal waste**.
- Hand it over at a take-back point for electrical equipment – at a collection yard, at a take-back point of a collective system, or at the retailer when purchasing a new equivalent product. Take-back is free of charge for the end user.
- The obligations under Act No. 542/2020 Coll., on end-of-life products, are fulfilled by the importer through a collective take-back system.
- Proper disposal helps prevent negative impacts on the environment and human health and contributes to the reuse of secondary raw materials.

Through its contractual partner **ASEKOL a.s.**, the company ensures the take-back of waste electrical equipment from households and the separate collection of waste electrical equipment, batteries and accumulators in accordance with the applicable legislation. The customer is entitled to hand over old electrical equipment or a battery or accumulator at any collection point of the above contractual partner. The addresses of these take-back points are listed at www.asekol.cz, www.ecobat.cz and also https://visoh2.mzp.cz/RegistrMistZO/RegistrMistZOPublic/MapaMistZpetOdberu.

4. Warranty and rights arising from defective performance

The rights and obligations of the contracting parties are governed by Czech law, in particular by Act No. 89/2012 Coll., the Civil Code, and Act No. 634/1992 Coll., on consumer protection.

- The seller is liable to the buyer for the product being free of defects on receipt. If the buyer is a consumer, a defect may be notified **within two years of receipt** of the product (Section 2165 of the Civil Code).
- If a defect appears within **one year** of receipt, the product is deemed to have been defective already at the time of receipt (Section 2161(5) of the Civil Code).
- When purchasing online, a consumer has the right to **withdraw from the contract within 14 days** of receiving the goods without giving a reason (Section 1829 of the Civil Code).
- Claims should be made with the retailer from whom you purchased the product. The importer's contact details are given in Chapter 3.1.
- The competent body for out-of-court settlement of consumer disputes is the **Czech Trade Inspection Authority**, Štěpánská 796/44, 110 00 Prague 1, www.coi.cz.