ROTORAMA

HDZero Freestyle V2

5.8 GHz digital video transmitter (VTX)
User manual



Never apply power to the VTX without an antenna installed and secured. In the Czech Republic the VTX may only be operated on permitted channels at a maximum of 25 mW e.i.r.p. (see chapter 1.2).

www.rotorama.com

Contents

1. Safety instructions

1.1 General rules

1.2 Frequencies and RF output power

2. Product description

2.1 Introduction

2.2 Specifications

2.3 Package contents

2.4 Parts overview

3. Installation

3.1 Wiring

3.2 Powering the VTX

3.3 Mounting considerations

3.4 Antenna and U.FL connector

4. Setup

4.1 OSD/MSP setup in Betaflight

4.2 VTX tables and SmartAudio

4.3 Stick command gestures

4.4 VTX menu

4.5 Typical settings

5. VTX LED pattern

6. VTX firmware update

7. Troubleshooting

8. Information for the EU and Czech Market

9. Warranty and rights arising from defective performance

1. Safety instructions

1.1 General rules

Read this entire manual carefully before installation and first power-up. The video transmitter (VTX) is intended to be built into an FPV drone or another radio-controlled model. Installation should be carried out by a user experienced in soldering and wiring model electronics.

- **Never apply power to the VTX without an antenna installed and secured.** Transmitting without an antenna may permanently damage the VTX.
- Check polarity and voltage before connecting power. The input voltage must be within 7–25 V.
- The VTX becomes hot during operation, even in low-power modes. Do not touch the case during operation or shortly after switching off, and ensure airflow. If the model stays powered on the ground for a longer time, switch the VTX to 0mW.
- Work only with the flight battery disconnected. Always remove the propellers when testing on the bench.
- Do not expose the product to moisture, dust or direct sunlight, and operate it within 0–40 °C.
- Do not modify the product or open the case. The product is not a toy and must be kept away from children.
- When flying an FPV drone, follow the rules for unmanned aircraft valid in the country where you fly.

1.2 Frequencies and RF output power

EU legislation applies in all member states, but national regulations differ from country to country – in particular the permitted frequency bands and maximum transmit power. The information in this chapter describes the situation in the Czech Republic. If you operate the product in another country, you must follow the regulations of the country in which you operate it.

In the Czech Republic, general authorisation No. VO-R/10 issued by the Czech Telecommunication Office (ČTÚ) permits short-range devices in the **5725–5875 MHz band with a maximum of 25 mW e.i.r.p.** The radiated power includes the antenna gain. The user is responsible for setting the channel and power correctly.

▶ VTX channels and their frequencies (from the manufacturer's VTX table)

Channel	Frequency	Operation in CZ (VO-R/10)
R1	5658 MHz	outside permitted band – do not use
R2	5695 MHz	outside permitted band – do not use
R3	5732 MHz	permitted, max. 25 mW e.i.r.p.
R4	5769 MHz	permitted, max. 25 mW e.i.r.p.
R5	5806 MHz	permitted, max. 25 mW e.i.r.p.
R6	5843 MHz	permitted, max. 25 mW e.i.r.p.
R7	5880 MHz	outside permitted band – do not use
R8	5917 MHz	outside permitted band – do not use
F2	5760 MHz	permitted, max. 25 mW e.i.r.p.
F4	5800 MHz	permitted, max. 25 mW e.i.r.p.

※ The VTX also offers channels E1 and F1; their frequency is not given in the manufacturer's VTX table. Channels L1–L8 (Low Band) are only available after unlocking (chapter 6.5). Channels whose frequency is not within 5725–5875 MHz must not be used in the Czech Republic without a special authorisation.

From the factory, 25mW or 200mW can be selected. In the Czech Republic use only 25mW. Higher power levels (500mW and MAX) are only available after unlocking with special firmware and are intended exclusively for holders of the required licence, e.g. a HAM radio licence.

2. Product description

2.1 Introduction

The HDZero Freestyle V2 VTX is our 2nd generation 5.8GHz digital video transmitter which can be installed into most 3-5-inch HD drones. All sockets are well protected by the CNC case that provides durability, RF shielding and improved signal integrity. A wire harness is included for solderless connection for power and MSP UART port. The antenna and MIPI cable are secured by the included retention bar and screws.

The VTX supports 720p60, 1080p30, 540p60 and 540p90 video modes. Freestyle V2 VTX is capable of 900mW RF output on channel R1 – output decreases as frequency increases. From the factory, the VTX is limited to 200mW output.

2.2 Specifications

Manufacturer	Divimath, Inc.
Model	HDZero Freestyle V2 VTX (HDZ3131)
Operating frequency	5.725–5.850 GHz
RF power output	25 mW, 200 mW (factory); 500 mW and MAX – up to 900 mW on channel R1 – only after unlocking (chapter 6.4)
Video modes	720p60, 1080p30, 540p60, 540p90
Input power	7–25 V (2S–6S)
Power consumption	6–15 W
Dimensions	29 × 30 × 14 mm
Weight	22.3 g
Mounting pattern	20 × 20 mm, M2
Antenna interface	secured U.FL
Video in	secured MIPI
OSD	MSP (DisplayPort), MSP Canvas mode
Operating temperature	0–40 °C

2.3 Package contents

- 1× HDZero Freestyle V2 VTX
- 1× power cable (Power/UART)
- 1× SA cable
- 1× plastic bar for MIPI cable with 3 screws M1.4 × 2 mm
- 1× plastic bar for U.FL with 3 screws M1.4 × 8 mm

- 1× double-sided tape 29 × 30 × 1 mm

※ The package does **not** include an antenna, camera or MIPI cable.

2.4 Parts overview

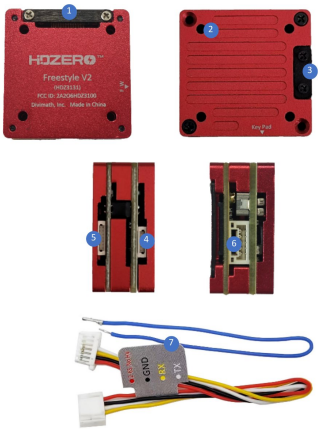

Top, bottom and side views and the wire harness

No.	Part
①	Secured MIPI connector (camera)
②	M2 mounting hole
③	Secured U.FL connector (antenna)
④	Keypad connector
⑤	FW update connector
⑥	Power (7–25 V) / UART connector
⑦	Power/UART harness

▶ Power/UART harness wiring

Power/UART connector	Cable colour	Connected with
Ground	black	Ground
Power	red	Power 7–25 V
RX	yellow	FC.TX
TX	white	FC.RX
SA	blue	not used

3. Installation

3.1 Wiring

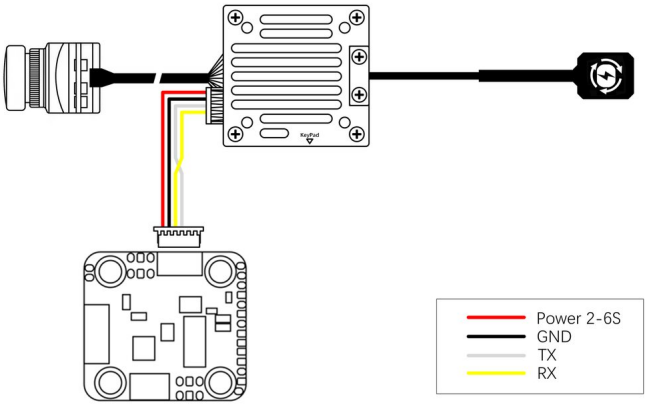

Connecting the VTX to the camera, antenna and flight controller (FC)

- **One UART** of the flight controller (FC) is needed for OSD, camera, VTX menu and MSP VTX. Connect the VTX RX wire to the FC TX and the VTX TX wire to the FC RX.
- Don't use SmartAudio (deprecated) – use MSP instead.
- Whenever feasible, opt for the HDZero Halo FC – it enables a solder-free connection to the Freestyle V2 VTX, simplifying assembly and minimizing setup errors.
- The HDZero VTX itself has no inherent preference for antenna polarization. However, for optimal signal performance, its antenna polarization should be matched with that of the receiving device – such as the HDZero Goggle, HDZero receiver or HDZero monitor.
- **Never apply power on VTX without antenna installed and secured.**

3.2 Powering the VTX

Using a battery eliminator circuit (BEC) is highly recommended to avoid voltage spikes, which can damage the VTX. Although you can power the VTX directly from the battery (VBAT), a BEC will provide more consistent power and will help absorb any voltage spikes, protecting your VTX from over-voltage conditions and under-voltage (brown-outs). Running on VBAT is always the last choice due to the challenging voltage environment in an aircraft.

- Check your FC specs to see if you can run your VTX from the FC's BEC. All the FCs that include an integrated BEC for DJI VTXes should also work for HDZero VTXes.

- Freestyle V2 VTX consumes up to 15W. If it is connected with an FC that has a built-in BEC output, make sure the BEC can provide enough current. For example, if the BEC provides 10V, it needs a minimum of 1.5A current output.
- Freestyle V2 is the only HDZero VTX that supports 6S VBAT.
- To reduce noise from the power system, the manufacturer recommends installing a capacitor (≥350µF, 50V) across the battery leads.

3.3 Mounting considerations

It is very important to keep some distance between the VTX and the ESC/FC boards. The RF portion of the VTX is vulnerable to electronic noise caused by ESC/motors, and the RF signal can be bounced back from surfaces of boards or carbon fiber plates and fed back to the power amplifier in the VTX. This will deteriorate the RF signal integrity and could damage the amplifier.

- Freestyle V2 VTX can be mounted with M2 screws or the included double-sided tape. In some cases, it is necessary to mount the VTX with double-sided tape rather than screws to avoid electrical noise when the craft's motors are armed.
- If the VTX is mounted on the top of the stack, keep 5mm distance from the top carbon fiber plate.
- Avoid mounting the VTX in the middle of the stack.
- If the VTX is mounted on the bottom of the stack, it needs to be upside down (U.FL socket faces down) with a minimum of 5mm distance from the bottom carbon fiber plate.
- When using GPS, keep it physically separated from the Freestyle V2 VTX – especially the antenna – to minimize interference with the GPS signal.

3.4 Antenna and U.FL connector

The U.FL connector has a small footprint and light weight, but it is not a mechanically strong connector. Treat it as if it's made of glass.

- Always use the included retaining bar for the U.FL connector.
- Do not route the VTX antenna cable over the top of the VTX – the antenna cable must exit straight out of the back of the VTX.
- If the retaining bar is not used, run the antenna cable towards the middle of the board and secure it as a strain relief with temperature-resistant glue (avoid glue on hot components), Kapton tape, or a zip tie to a nearby standoff (be careful not to crush the coax).
- For larger builds, consider a U.FL→SMA pigtail that can be secured to the frame. A common failure point is where the coax cable is crimped to the SMA jack; if this joint is loose, RF performance will suffer greatly.
- When removing the antenna, do not apply stress in any one direction. Use a tweezer at the base of the neck of the connector and pull straight up (do not pry). There are tools designed to remove/insert U.FL connectors.

4. Setup

Please update the VTX firmware to the latest version to ensure compatibility with the latest cameras, flight controller software, and video receivers. It is not required for the VTX firmware version to match the video receiver version, but it is recommended. See chapter 6.

4.1 OSD/MSP setup in Betaflight

① Pre-requisite: flight controller firmware with MSP DisplayPort support – Betaflight, INAV, KISS ULTRA or FlightOne in a current version.

② Update the VTX and VRX firmware (www.hd-zero.com/document).

③ Connect the VTX UART to an available UART on your FC (chapter 3.1).

④ Connect the FC to a computer with a USB cable and start Betaflight Configurator. In the *Ports* tab activate *VTX (MSP + Displayport)* on the UART used for the VTX, then *Save and Reboot*. A soft serial UART is not supported.

⑤ In the *Configuration* tab activate the *OSD* function and save. In the *OSD* tab configure the items you want to show on your screen and save.

4.2 VTX tables and SmartAudio

The HDZero VTX tables have been integrated into the VTX firmware and are configured automatically at power-on, so you don't need to configure them manually. The VTX no longer supports SmartAudio; use MSP OSD instead. The SA cable from the package is not used.

4.3 Stick command gestures

The VTX menu, Betaflight menu and camera menus are controlled with stick gestures on the radio while disarmed. An orange arrow means move; a green arrow means move and hold for 3 seconds.

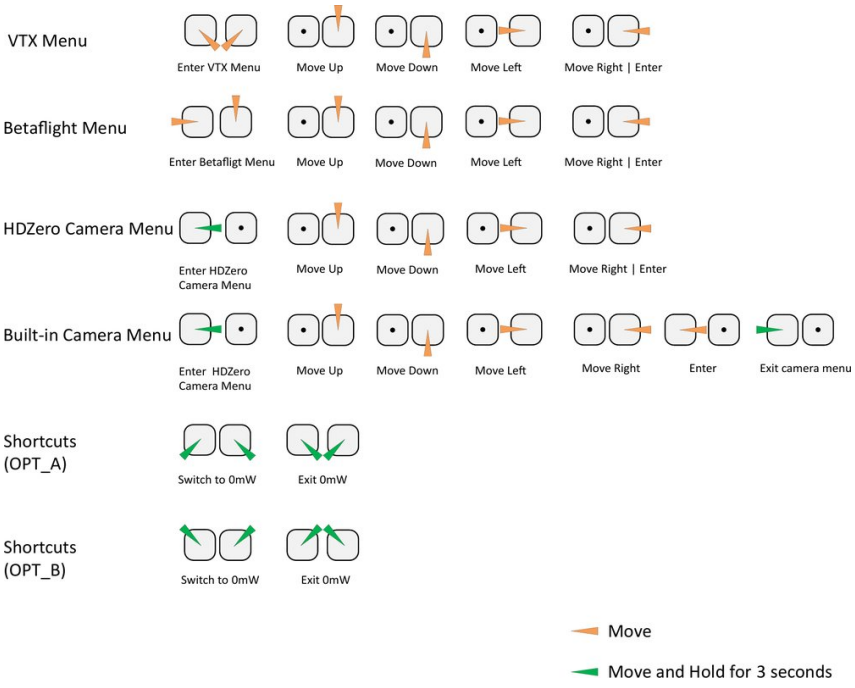

Stick command gestures (from the manufacturer's original manual)

Label in figure	Meaning
VTX Menu / Enter VTX Menu	VTX menu / enter the VTX menu
Betaflight Menu	Betaflight (OSD) menu
HDZero Camera Menu	HDZero camera menu
Built-in Camera Menu	built-in camera menu
Move Up / Down / Left / Right	move up / down / left / right
Enter / Exit camera menu	confirm / exit the camera menu
Shortcuts (OPT_A, OPT_B)	shortcuts – Switch to 0mW / Exit 0mW

4.4 VTX menu

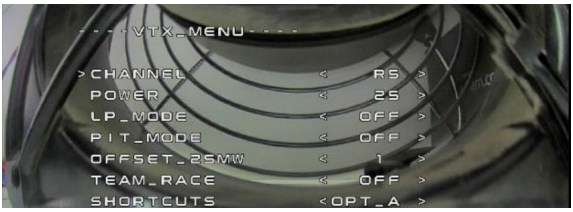

VTX menu shown in the goggles

CHANNEL – R1–R8, E1, F1, F2 and F4. You will get an additional 8 channels L1–L8 if you unlock the low band. For channels permitted in the Czech Republic see chapter 1.2.

POWER – the desired RF power level: 25mW, 200mW, after unlocking also 500mW and MAX. The actual RF power level depends on the following settings and FC status.

PIT_MODE (set to OFF if you don't know how it works):

- **OFF** – the output RF power will be set to the POWER setting.
- **P1MW** – the output RF power will be 0.1mW (in order not to interfere with other pilots). If the aircraft is armed, RF output power will be automatically set to POWER within seconds.
- **0MW** – there will be zero RF output. If the aircraft is armed, RF output power will be automatically set to POWER within seconds.
- After the first arm, the VTX will not enter pit mode again until VBAT power is reset.

LP_MODE (set to OFF if you don't know how it works):

- **OFF** – the output RF power will be set to the POWER setting.
- **ON** – if PIT_MODE is OFF and the aircraft is disarmed, the RF power level will be forced to 25mW regardless of the POWER setting; it will be set to POWER when the aircraft is armed.
- **1ST** – if PIT_MODE is OFF, the RF power level will be forced to 25mW at power-on regardless of the POWER setting; it will be set to POWER when the aircraft is armed. After the first arm, the VTX will not enter LP mode again until VBAT power is reset.

OFFSET_25MW (set to 0 if you don't know how it works) – fine-tunes the RF output power to be exactly 25mW. The range is −10 to 10, the step size is about 0.1dB.

TEAM_RACE (set to OFF if you don't know how it works):

- **OFF** – the RF power after power-on is determined by other settings.
- **MODE1** – VTX RF remains off (0mW) after power-up and exits 0mW when the aircraft is armed, via the stick command, or when VTX power is set to non-0mW

through the FC UART. If the UART communication between VTX and FC is disconnected, the VTX turns off RF until communication is restored and the VTX is repowered.

- **MODE2** – VTX RF remains off (0mW) after power-up and exits 0mW when the aircraft is armed, via the stick command, or when VTX power is set to non-0mW through the FC.

SHORTCUTS – two different stick commands for switching to or exiting 0mW (OPT_A or OPT_B, see chapter 4.3).

The VTX still becomes hot even in P1MW mode. If the model will be idle for a while, use the stick shortcut to switch to 0mW. The video in the goggles comes back as soon as the aircraft is armed.

4.5 Typical settings

▶ Racing or daily practice

CHANNEL: assigned channel · POWER: 25mW · PIT_MODE: OFF · LP_MODE: OFF · OFFSET_25MW: 0 · TEAM_RACE: OFF · SHORTCUTS: OPT_A

- While waiting for the arm command from the race director, use the stick command (OPT_A, Switch to 0mW) to enter 0mW to avoid VTX overheating; there is no video in the goggles.
- Right before the arm command, use the stick command (OPT_A, Exit 0mW) to exit 0mW – you will have video in the goggles right away.

▶ Team racing

CHANNEL: assigned channel · POWER: 25mW · PIT_MODE: OFF · LP_MODE: OFF · OFFSET_25MW: 0 · TEAM_RACE: MODE1 · SHORTCUTS: OPT_A

- When the VTX boots up, it is on 0mW. It starts to transmit when armed or after exiting 0mW with the stick command.
- After a crash the VTX might continue transmitting and interfere with a teammate on the same channel. Disarm and use the stick command to enter 0mW (works only if the FC still functions). If the VTX fails to communicate with the FC, it automatically switches to 0mW after several seconds.

5. VTX LED pattern

The VTX has two LEDs: red and blue.

▶ Red LED

The red LED serves as the power indicator. A healthy unit displays a steady red light. If it's off or flashing, this signals a VTX failure. If there is no red light, check that the power wires are connected and check the voltage with a multimeter.

▶ Blue LED

- Upon boot, three rapid flickers confirm that MSP communication with the FC is active.
- Specific modes are represented with patterns of long (1 second) and short (1/4 second) pulses within a 4-second timeframe.

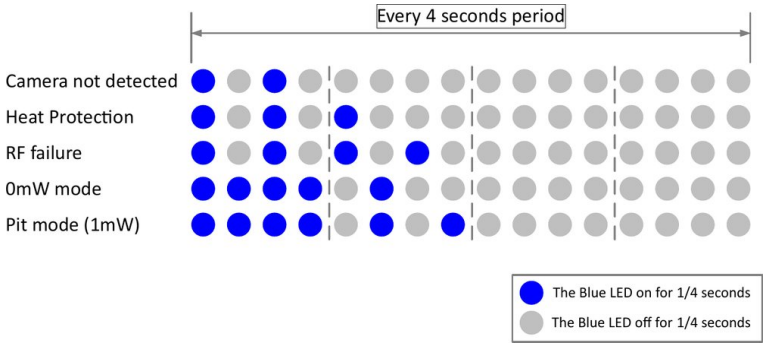

Blue LED patterns within a 4-second period (from the manufacturer's original manual)

Blue LED pattern	Meaning	What to do
2 short flashes (Camera not detected)	camera not detected	reseat the MIPI cable on VTX and camera; check the MIPI cable and connectors for damage; replace the camera
3 short flashes (Heat Protection)	over-heating	use a fan to cool the VTX
4 short flashes (RF failure)	RF failure	replace the VTX
1 long, 1 short (0mW mode)	in 0mW mode	exit 0mW with the stick command
1 long, 2 short (Pit mode)	in 0.1mW mode	turn off PIT_MODE

※ The first three patterns indicate error conditions and take priority over all others. For example, if heat protection is engaged, setting the VTX to 0mW won't visibly change the LED.

6. VTX firmware update

6.1 HDZero Programmer

It is highly recommended to use the HDZero VTX Programmer to update the VTX. Only Windows is supported for now.

① Download HDZeroProgrammer.zip from www.hd-zero.com/document and extract HDZeroProgrammer.exe to C:\HDZero.

② Launch C:\HDZero\HDZeroProgrammer.exe. All compatible VTX models appear in the list.

③ Select the VTX type that you want to update.

④ *Load Online Firmware* fetches firmware from GitHub and lets you select a version, or *Load Local Firmware* loads a local HDZERO_TX.bin.

⑤ Click *Flash VTX* to start the update.

6.2 Downloading VTX firmware

If you're behind a firewall that restricts access to GitHub, download the firmware manually from the VTX Firmware section at www.hd-zero.com/document. Files are named HDZEROVTX_RevYYYYMMDD.zip, where YYYYMMDD is the release date. The archive includes firmware for all compatible VTX models; each folder contains an HDZERO_TX.bin file for that VTX type. Use the file for Freestyle V2.

6.3 Update with HDZero Goggle or HDZero Receiver

▶ HDZero Goggle

① Copy HDZERO_TX.bin to the root directory of an SD card formatted as FAT32.

② Power on the goggle.

③ Connect the VTX (FW Update connector) and the goggle with the programming cable.

④ Go to *Main menu* → *Firmware* → *Update VTX*; the display shows the flashing status.

⑤ Disconnect the VTX – it is now flashed with the new firmware.

▶ HDZero Receiver

① Format the SD card (FAT32, allocation unit size 4096 bytes).

② Power off the VRX if it is on.

③ Unzip HDZERO_TX.bin for the corresponding VTX onto the SD card and insert it into the VRX module.

④ Connect the cable between the module and the VTX.

⑤ Power on the VRX module.

⑥ If “Wait to Connect VTX...” or “Check cable...” is shown, make sure step ④ is secured.

⑦ If “Firmware update failed” is shown, repeat from step ①.

⑧ “Firmware update successful” means the VTX is updated. HDZERO_TX.bin is removed from the SD card automatically.

※ An empty file named DONOTREMOVE.txt in the SD card root directory prevents HDZERO_TX.bin from being removed – useful when updating multiple VTXes.

6.4 Unlock RF power limit

In the Czech Republic, a maximum of 25 mW e.i.r.p. is permitted for this VTX (chapter 1.2). Unlocking higher power levels is intended exclusively for holders of the required licence, e.g. a HAM radio licence. Do not unlock the VTX without it.

The VTX is limited to 25mW/200mW out of the box. With the required licence, special firmware from the Utilities section on HDZero Download enables up to 900mW.

① Download the firmware Unlock_FreestyleVTX.zip and unzip it to the root directory of the SD card.

② Flash this firmware to the VTX.

③ Power on the VTX with main battery power; the BLUE LED flashes 3 times when done – the VTX is unlocked. **Do not skip this step.**

④ Power the VTX off.

⑤ Unzip the normal VTX firmware to the root directory of the SD card and flash it to the VTX.

⑥ The higher RF output options are now available. Once unlocked, there is no need to unlock again when newer firmware is installed.

6.5 Unlock Low Band

The VTX low band option (channels L1–L8) needs to be unlocked before it can be used. The manufacturer notes that you must make sure your region allows low band before unlocking. In the Czech Republic, general authorisation VO-R/10 permits only the 5725–5875 MHz band for this type of device.

① Download Unlock_Lowband.zip from www.hd-zero.com/document.

② Unzip and flash it as a firmware update to your VTX.

③ Power on the VTX with main battery power. The BLUE LED flashes 5 times and then goes out to indicate that the unlock has completed. **Do not skip this step.**

④ Flash the latest release firmware to the VTX. Channels L1–L8 will appear in the VTX menu.

7. Troubleshooting

HDZero user community:

- HDZero Facebook group: www.facebook.com/groups/HDZero
- HDZero Discord server: https://discord.gg/JPesSHpmCU

▶ Red LED blinks or is off

- Check the power connection and make sure the input voltage is within 7–25 V.
- Ensure the power source can provide sufficient current – the Freestyle V2 can require up to 15W. Some FCs may not be capable of supplying adequate current.
- The VTX's power circuit may be damaged.

▶ Blue LED blinks or is off

- Absence of the blue LED suggests a critical failure – the VTX may be completely non-operational.
- Under normal conditions it stays steadily lit. Upon boot, three rapid flickers confirm MSP communication with the FC.
- If it blinks, check the LED pattern table in chapter 5.

▶ Snow noise at minimal range

- Check if the VTX is in P1MW mode (one long and two short flashes).
- High RF power with goggles or receiver too close causes signal saturation. Lower the RF power and increase the separation.
- Position the radio receiver and its antenna away from the VTX; do not place the VTX next to the ESC board.
- The VTX antenna side must have 5mm vertical clearance.
- Replace the antenna or pigtail; verify that no other VTX (analog, DJI, HDZero) is on the same channel, and rule out Wi-Fi interference (typically diagonal noise patterns).
- The RF circuit of the VTX may be faulty.

▶ Video works but no OSD is displayed

The HDZero VTX retrieves telemetry from the FC using the MSP protocol and transmits it wirelessly to the goggles or receiver, where it is overlaid onto the video stream.

- Update the VTX, goggles and receiver to the latest firmware.
- FC UART TX must be connected to the VTX RX and FC RX to the VTX TX.
- Check the Betaflight settings (chapter 4.1).
- The UART port on the FC could be damaged – try another UART (avoid soft serial and SA ports) or another FC.

▶ Noisy video when armed and throttle is applied

- This may be caused by noisy or insufficient power. If the VTX is powered by the FC's BEC, make sure it can supply adequate current.
- Install a large capacitor (≥350µF, 50V) across the battery leads.
- The radio transmitter may be affecting the video receiver – lower its power and keep it well away from the goggles or receiver.

▶ No video in the goggles

- Blue LED completely off: the VTX is bad.
- One long and one short flash: the VTX is in 0mW mode – exit it with the stick command.
- Two short flashes: the VTX cannot detect the camera – damaged camera, bad or loose MIPI cable, damaged MIPI connectors or damaged VTX.
- Blue LED solid: verify that VTX and goggles are not set differently (Low Band vs. normal band). If the Nano90 camera is in 540p60 mode, the goggles must be set to *HDZero BW* = *Narrow* (*Goggle Menu* → *Source* → *HDZero BW*).

▶ The VTX fails to flash

Make sure all pins on the VTX and the FW port of your goggles or receiver are perfectly straight. Even a single crooked pin can cause flashing failures.

▶ FC drops to bootloader when connected to the VTX

Some FCs may randomly enter bootloader mode when connected to early-production HDZero VTX modules. To resolve this, add a 200-ohm resistor in-line between the FC UART TX and VTX UART RX wires. All HDZero VTX units produced after 2023 already include this resistor.

8. Information for the EU and Czech Market

8.1 Importer and responsible person in the EU

The product is placed on the European Union market by the importer stated below, who is at the same time the responsible person within the meaning of Article 16 of Regulation (EU) 2023/988 of the European Parliament and of the Council on general product safety (GPSR).

Importer / responsible person in the EU	Rotorama, s.r.o.
Company ID (IČO)	051 57 692
VAT ID (DIČ)	CZ05157692
Registered office	Okrajová 1351, 674 01 Třebíč, Czech Republic
E-mail	info@rotorama.cz
Phone	+420 252 252 098
Website	www.rotorama.com

8.2 Product conformity

CE

- The product bears the **CE** marking and complies with the requirements of the applicable European Union harmonisation legislation.
- A copy of the **EU Declaration of Conformity** is available from the importer at the address stated above or at the e-mail address info@rotorama.cz.
- **Product identification:** the type designation (HDZero Freestyle V2, HDZ3131) is given on the top of the case; the firmware version can be found in the *INFO* section of the VTX menu.

8.3 Disposal of electrical equipment



- The crossed-out wheeled bin symbol on the product, its packaging or in the documentation means that at the end of its service life the product **must not be disposed of together with mixed municipal waste**.
- Hand it over at a take-back point for electrical equipment – at a collection yard, at a take-back point of a collective system, or at the retailer when purchasing a new equivalent product. Take-back is free of charge for the end user.
- The obligations under Act No. 542/2020 Coll., on end-of-life products, are fulfilled by the importer through a collective take-back system.
- Proper disposal helps prevent negative impacts on the environment and human health and contributes to the reuse of secondary raw materials.

Through its contractual partner **ASEKOL a.s.**, the company ensures the take-back of waste electrical equipment from households and the separate collection of waste electrical equipment, batteries and accumulators in accordance with the applicable legislation. The customer is entitled to hand over old electrical equipment or a battery or accumulator at any collection point of the above contractual partner. The addresses of these take-back points are listed at www.asekol.cz, www.ecobat.cz and also https://visoh2.mzp.cz/RegistrMistZO/RegistrMistZOPublic/MapaMistZpetOdberu.

9. Warranty and rights arising from defective performance

9.1 Rights of the buyer under Czech law

The rights and obligations of the contracting parties are governed by Czech law, in particular by Act No. 89/2012 Coll., the Civil Code, and Act No. 634/1992 Coll., on consumer protection. The manufacturer's warranty terms set out below (Chapter 9.2) **do not in any way limit** the buyer's rights arising from these regulations.

- The seller is liable to the buyer for the product being free of defects on receipt. If the buyer is a consumer, a defect may be notified **within two years of receipt** of the product (Section 2165 of the Civil Code).
- If a defect appears within **one year** of receipt, the product is deemed to have been defective already at the time of receipt (Section 2161(5) of the Civil Code).
- When purchasing online, a consumer has the right to **withdraw from the contract within 14 days** of receiving the goods without giving a reason (Section 1829 of the Civil Code).
- Claims should be made with the retailer from whom you purchased the product. The importer's contact details are given in Chapter 8.1.
- The competent body for out-of-court settlement of consumer disputes is the **Czech Trade Inspection Authority**, Štěpánská 796/44, 110 00 Prague 1, www.coi.cz.

9.2 Manufacturer's warranty terms

※ The following text is the manufacturer's original warranty statement.

Due to the nature of this hobby, warranty claims are accepted only for items determined to be Dead on Arrival (DOA).

Please note that we do not cover any damages resulting from crashes, misuse, or improper handling under any circumstances. This includes but is not limited to:

- Minor or major crashes
- Hard landings
- Faulty soldering
- Incorrect polarity connection
- Insufficient cooling
- Powering the device without an antenna

If you experience any issues or have questions, feel free to reach out to us at: support@divimath.com