Mobula8 Frame

85 mm frame with protective ducts for Tinywhoop
User manual



Read the entire manual before assembly. The frame is a structural part only – motors, flight controller, camera, propellers and screws are not included.

Rotorama, s.r.o. · www.rotorama.com

Contents

1. Product description

1.1 Intended use

1.2 Specifications and package contents

2. Assembly and use

2.1 What you will need

2.2 Mounting the motors

2.3 Flight controller (FC), camera and wiring

2.4 Propellers and battery

2.5 Dimensions

3. Safety and maintenance

3.1 Safety instructions

3.2 Inspection and maintenance

3.3 Replacing a damaged frame

4. Information for the EU and Czech Market

4.1 Importer and responsible person in the EU

4.2 Disposal

5. Warranty and rights arising from defective performance

1. Product description

1.1 Intended use

The Happymodel Mobula8 Frame is a plastic frame with integrated protective ducts for small Tinywhoop-type FPV drones with an 85 mm motor-to-motor distance and propellers up to 51 mm (2") in diameter. The ducts protect the propellers and the surroundings in a crash, which makes the frame suitable for flying in halls, indoors and among obstacles outdoors.

The frame serves as a replacement part for Happymodel Mobula8 drones or as the basis of your own build. The flight controller is mounted low in the centre of the frame and the motors sit in the mounts in the middle of the ducts. The electronics, motors and propellers shown in the photo are not included.



The frame in an assembled Happymodel Mobula8 drone (manufacturer's illustration photo)

1.2 Specifications and package contents

Product designation	Happymodel Mobula8 Frame (85 mm), manufacturer Happymodel
Motor-to-motor distance (diagonal)	85 mm
Max. propeller diameter	51 mm (2")
Footprint	120 × 120 mm (according to the manufacturer's drawing)
Weight	11.5 g (manufacturer's figure)
Material and colour	plastic, transparent black
Motor mounting	3 holes – motors 0702, 0703, 0802, 1102 4 holes – motors 1002, 1102, 1103
Package contents	1× frame
Not included	screws, motors, flight controller (FC), camera, camera canopy, video transmitter (VTX), propellers, battery and battery strap

2. Assembly and use

2.1 What you will need

- Four brushless motors with a mounting pattern matching the frame (see chapter 1.2) and screws of a suitable length.
- A flight controller (FC), typically an AIO board with integrated electronic speed controllers (ESC), whose size and mounting hole pattern match the central mount of the frame. Compare it with the dimensional drawings in chapter 2.5 before buying.
- A camera, camera canopy, receiver and video transmitter (VTX) according to your build.
- Propellers with a diameter of no more than 51 mm (2").
- A battery strap or holder and a suitable battery for the electronics used.
- A small Phillips or hex screwdriver to suit the screws used, cable ties and tweezers.

2.2 Mounting the motors

① Choose the set of holes that matches your motor: the 3-hole mount or the 4-hole mount (see chapter 1.2).

② Place the motor in the mount in the middle of the duct so that its wires point towards the centre of the frame.

③ Tighten the screws gently – the thread in the plastic frame or in the motor strips easily.

④ Use screws of the correct length – a screw that is too long can damage the motor windings. After mounting, turn the motor by hand; it must spin freely without rubbing.

⑤ Route the motor wires along the frame arms to the centre and secure them so that they cannot get into the propeller.

2.3 Flight controller (FC), camera and wiring

- Place the flight controller in the central mount of the frame and secure it as specified by its manufacturer (screws, anti-vibration grommets).
- Point the direction arrow on the flight controller forwards, or set the board orientation in the configuration (e.g. Betaflight).
- Mount the camera with its canopy so that the view is not obstructed by the ducts or antennas.
- Route the antennas and the battery lead away from the propellers and secure them.

2.4 Propellers and battery

- Use propellers with a diameter of no more than 51 mm (2"). After fitting, turn each propeller by hand – it must not touch the duct wall or any wires.
- Set the motor direction and propeller orientation (props in / props out) according to the flight controller configuration. Fasten the battery firmly (with a strap or holder) so that it cannot shift in flight.

2.5 Dimensions

Manufacturer's dimensional drawings. All dimensions are in millimetres.

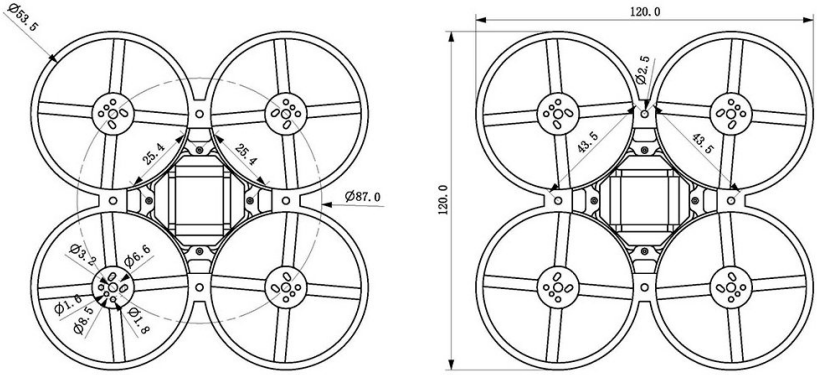

Top view – dimensions of the frame, ducts and motor holes

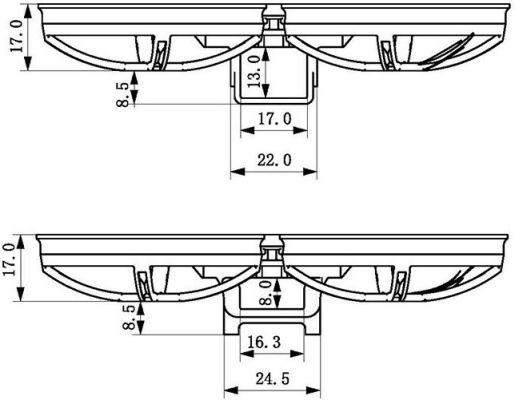

Side view – duct height and space of the central mount (two versions of the view)

3. Safety and maintenance

3.1 Safety instructions

- The frame is a structural part only. The safety of the finished drone depends on the components used – follow the manuals of the flight controller, motors, video transmitter and batteries.
- Keep the **propellers removed** during assembly, configuration and when connected to a computer, and connect the battery only just before flight.
- The protective ducts reduce the risk of injury but do not eliminate it. Spinning propellers can cause cuts – do not reach into the ducts while the drone is armed (Arm, motors enabled).
- The assembled drone is an unmanned aircraft. Its operation is governed by Regulation (EU) 2019/947 and the regulations of the country in which you fly.
- Keep small parts (screws, grommets) out of the reach of children.

3.2 Inspection and maintenance

- Before every flight and after every crash, inspect the frame, in particular the duct joints, arms and motor mounts. Do not use a cracked or deformed frame any more.
- Check that the motor screws are tight and that no wire reaches into a duct.
- Clean the frame with a dry or slightly damp cloth. Do not use solvents.
- Do not expose the frame to high temperatures (e.g. in a car in the sun) – the plastic may deform.

3.3 Replacing a damaged frame

① Disconnect the battery and remove the propellers.

② Release the flight controller, camera and antennas and unscrew the motors.

③ Transfer the parts to the new frame following chapters 2.2 to 2.4.

④ Before the first flight, check that the motors and propellers turn freely and that the drone works correctly without propellers.

4. Information for the EU and Czech Market

4.1 Importer and responsible person in the EU

The product is placed on the European Union market by the importer stated below, who is at the same time the responsible person within the meaning of Article 16 of Regulation (EU) 2023/988 of the European Parliament and of the Council on general product safety (GPSR).

Importer / responsible person in the EU	Rotorama, s.r.o.
Company ID (IČO)	051 57 692
VAT ID (DIČ)	CZ05157692
Registered office	Okrajová 1351, 674 01 Třebíč, Czech Republic
E-mail	info@rotorama.cz
Phone	+420 252 252 098
Website	www.rotorama.com

4.2 Disposal

- The frame itself is not electrical equipment. At the end of its service life, dispose of it as sorted waste according to local rules (usually plastics) or take it to a collection point.
- Electronic components that you operate on the frame (motors, flight controller, camera, video transmitter, battery) do not belong in mixed or plastic waste. Take them to a collection point for electrical equipment and batteries according to the rules of your country – in the Czech Republic, addresses can be found e.g. at www.asekol.cz and www.ecobat.cz.

5. Warranty and rights arising from defective performance

The rights and obligations of the contracting parties are governed by Czech law, in particular by Act No. 89/2012 Coll., the Civil Code, and Act No. 634/1992 Coll., on consumer protection.

- The seller is liable to the buyer for the product being free of defects on receipt. If the buyer is a consumer, a defect may be notified **within two years of receipt** of the product (Section 2165 of the Civil Code).
- If a defect appears within **one year** of receipt, the product is deemed to have been defective already at the time of receipt (Section 2161(5) of the Civil Code).
- When purchasing online, a consumer has the right to **withdraw from the contract within 14 days** of receiving the goods without giving a reason (Section 1829 of the Civil Code).
- Claims should be made with the retailer from whom you purchased the product. The importer's contact details are given in Chapter 4.1.
- The competent body for out-of-court settlement of consumer disputes is the **Czech Trade Inspection Authority**, Štěpánská 796/44, 110 00 Prague 1, www.coi.cz.